SOD-523 Plastic-Encapsulate Diodes

FEATURES

- High-Speed Switching Applications
- Lead Finish: 100% Matte Sn (Tin)
- Qualified Reflow Temperature: 260 ℃
- Extremely Small SOD-523 Package

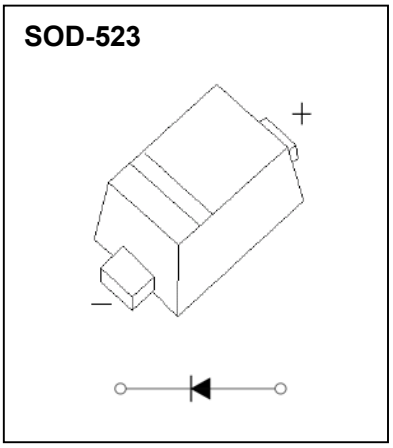

MARKING: A6

MAXIMUM RATINGS (T_a=25℃ unless otherwise noted)

Symbol	Parameter	Value	Unit
V_R	Reverse Voltage	75	V
I_F	Forward Continuous Current	200	mA
I_{FSM}	Non-repetitive Peak Forward SurgeCurrent@t=8.3ms	2	A
P_D	Power Dissipation	150	mW
$R_{\Theta JA}$	Thermal Resistance from Junction to Ambient	833	℃/W
T_J,T_{stg}	Operation Junction and Storage Temperature Range	-55~+150	℃

Electrical Ratings @Ta=25℃

Parameter	Symbol	Min	Typ	Max	Unit	Conditions
Reverse breakdown voltage	$V_{(BR)}$	75				I_R=100uA
Forward voltage	V_{F1}			715	mV	I_F=1mA
	V_{F2}			855		I_F=10mA
	V_{F3}			1000		I_F=50mA
	V_{F4}			1250		I_F=150mA
Reverse recovery Time	t_{rr}			6.0	ns	I_F=I_R=10mAdc,R_L=50Ω
Reverse current	I_R			1.0	μA	V_R=75V
Forward recovery voltage to	V_{FR}			1.75	V	I_F=10mA, t_r= 20ns
Diode capacitance	C_D			2.0	pF	V_R=0V,f=1MHz
Stored charge	Q_S			45	pC	I_F=10mA, V_R=5.0V ,R_L=500Ω

Typical Characteristics

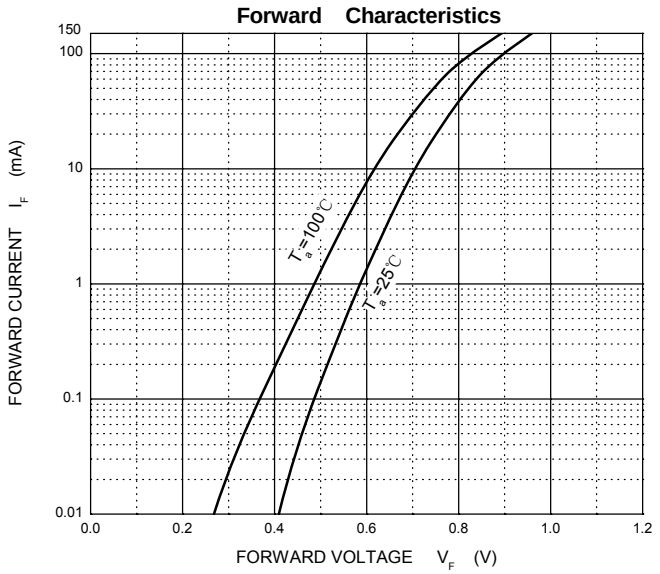

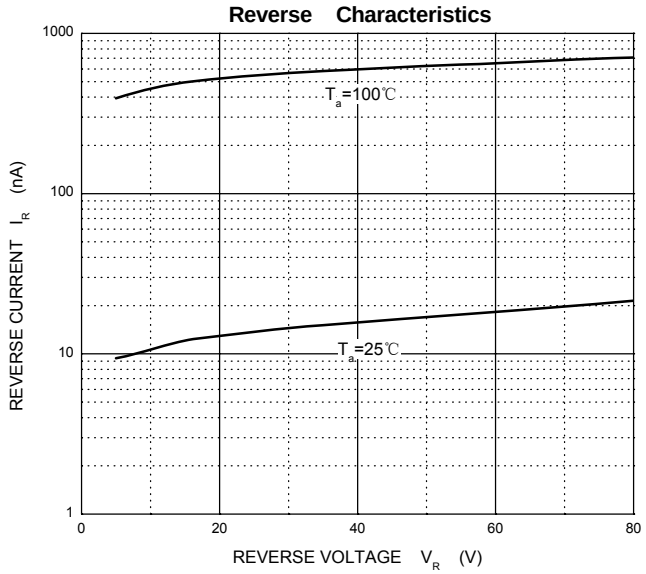

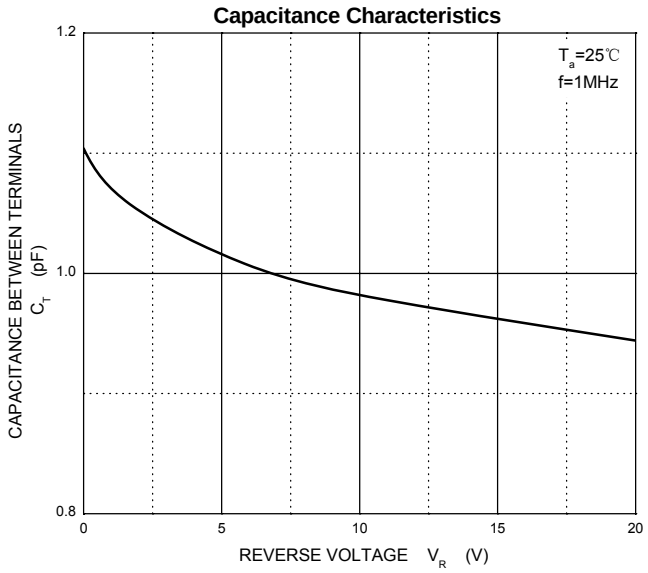

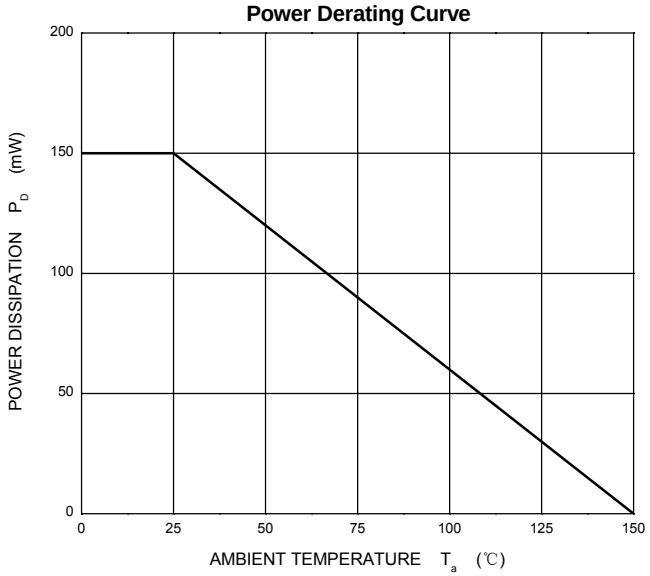

SOD-523 Package Outline Dimensions

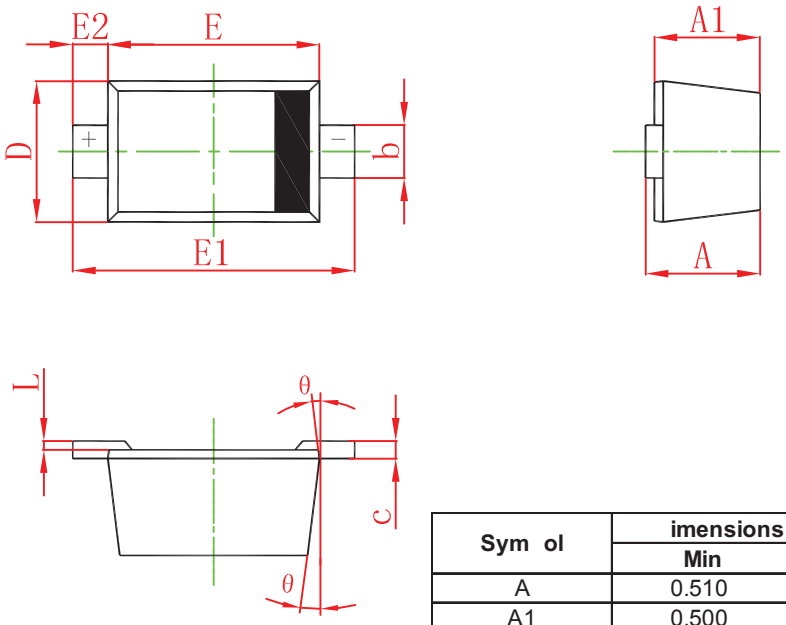

Sym ol	imensions In Millimeters		imensions In Inches	
	Min	Max	Min	Max
A	0.510	0.770	0.020	0.031
A1	0.500	0.700	0.020	0.028
b	0.250	0.350	0.010	0.014
c	0.080	0.150	0.003	0.006
D	0.750	0.850	0.030	0.033
E	1.100	1.300	0.043	0.051
E1	1.500	1.700	0.059	0.067
E2	0.200 REF		0.008 REF	
L	0.010	0.070	0.001	0.003
θ	7° REF		7° REF	

SOD-523 Suggested Pad Layout

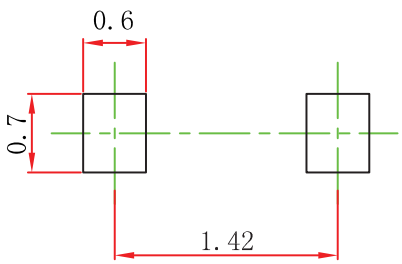

Note:
1.Controlling dimension:in millimeters.
2.General tolerance:± 0.05mm.
3.The pad layout is for reference purposes only.